WORKPLACE SOLUTIONS

Gira.™

BN

1.800.350.4127

www.BNind.com

B+N Industries

Main Offices:
15 Guittard Road
Burlingame, California 94010
800.350.4127
www.BNind.com

New York Showroom and Offices:
(By Appointment Only)
420 West 14th Street
New York, New York 10014
212.255.4110

Houston Showroom and Offices:
(By Appointment Only)
1800 Bering Drive, Suite 500
Houston, Texas 77057
713.430.9100

© B&N Industries, Inc.

facebook.com/BNIndustries
instagram.com/bn_industries/
linkedin.com/company/b&n-industries
pinterest.com/bnindustries/
twitter.com/BN_Industries

Table Of Contents

Overview	4
Steps to Roll Out Your New Office	26
Design Inspiration	42
Configuration Ideas	74
Technical Specifications	78
Rolling Wall Frames	80
Panels (Non-Powered)	81
Power Panels	82
Power Panel Layout Typical Setups	84
Power Panel and Battery Technical Data	90
Desks and Tables	102
Shelves	104
Cabinets and Drawers	105
Accessories	106
Taboroids and Accessories	107
Magnetic Graphics and Whiteboard Sheets	108
Materials, Colors, and Finishes	110
Sustainability Guidelines	112
Terms and Conditions	113

Welcome to Gira Office.

The way we work has changed.

Adaptive. Inclusive. Collaborative.

But the way we furnish offices hasn't. **Until now.**

To design our new office solution we talked to CEOs, HR, Facilities, and employees at companies big and small. We studied what regular and hybrid workers want and need to be the best (and happiest) at their jobs. And we drew from 30 years of experience creating design solutions for all types of environments, from retail to hotels to offices. Gira is the result. A vibrant, versatile system where nothing is fixed in place and everything can be arranged to create spaces that spark creativity, foster collaboration, and respect individual work styles. Where beautiful plants abound, meeting space is always available, power is close at hand, and everyone feels at home.

Attendance may no longer be mandatory. But inspiration still is. Gira makes your workplace the place people want to be.

Office power struggles solved.

Modular Power

Each outlet can be custom designed to accommodate a combination of NEMA and USB-C and USB-A, as well as the addition of inductive charging plates

Batteries Included

Our removable battery packs go anywhere and can charge a typical laptop a laptop up to four times on a single charge.

No Electricians Needed

All Gira walls plug directly into any outlet, and can be daisy-chained together for a longer run and still be fire marshal friendly.

Tame the tangle with modesty.

ABOVE: PET Felt panels interchange with modesty panels, so they can be inserted into bases or attached to the Cord Cradle hardware for a unified aesthetic.

RIGHT: Wrangle those unwieldy cables and cords into the tambour-scored PET Felt Cord Cradle, which can be adjusted back and forth on its hardware for levels of access and to accommodate the Modesty Panels.

Meet Taboroid™. Your friendly office companion that packs a lot of power.

Taboroid™ is a personal locker, charging station, and impromptu stool that gives everyone freedom to work anywhere, with everything they need close at hand.

Roll Taboroid up for a quick huddle with your team, store it under a desk for some focus time, and charge your devices wherever you are.

Gira with Taboroid replaces the office seating hierarchy with well designed, portable convenience for everybody.

The Carryalls

Heat-formed from thick, sturdy, PET felt and capped with FSC Certified White Oak, the Carryalls go where you go, and can be safely locked away in our keyed lockers or inside our Taboroid.

Divide and conquer.

Tall Rolling Walls with Wall Planters

The tall Rolling Walls don't have to have panels, they can transform into living walls with the addition of Wall Planters. Or combine them with planters and any of the shelves or cabinets for even more function.

Scissy Dividers

Portable and foldable, Scissy Dividers are named for how they act: scissoring along at any length by continually adding on extra crossbars and poles. The rhythmic circle cut pattern PET felt panels are hung with simple belting straps with snaps.

Welcome to the new conference room.
No reservation required.

Tall Gira Walls and Taboroids™.

The customizable tall Gira Walls can be outfitted with batteries, or with line-voltage outlets. Along with Taboroids™ and their battery packs, they can gather together for a quick huddle, or a create a space for a team project.

Stand up for yourself.
And sit down for yourself.

BassoAlto™ Powered Micro-Adjustable-Height Freestanding Desks

All desks and batteries come in Matte White or Matte Black.

Set up shop anywhere with our BassoAlto Sit-to-Stand Desk, powered by our remarkable removable battery packs that go anywhere. Charge your laptop (up to four times on a single charge), run your monitor, lighting, and endlessly adjust work surfaces. Available as line-voltage as well.

Wall Mounted Planters

Our wall mounted planters allow for a vertical garden to grow on any of the Gira walls.

Rolling Planters

With the same radial-corner look and oak handles as the Taboroids™, Rolling Planters and can hold low broad-leaf plants to tall indoor trees.

Straddling Planters

Add nature in between task spaces with Straddling Planters that sit atop the Gira walls, and can be repositioned from side to side.

Yearning for a change of scenery?

Refresh and renew your surroundings without replacing entire walls of panels by creating your own custom-printed graphics. Our magnetic graphic sheets can adhere to all of our metal panels, solid or perforated. Useful for wayfinding or as working whiteboards that can be stripped off and moved to other walls. They are heroes at producing massive supergraphics – creating entire overarching themes in a space. Or think about showcasing a launch, or supporting branding and an organization’s ethos. Magnetic graphics are just one more aspect that makes Gira sustainable: infused with reusability and repurposing.

Pick your components

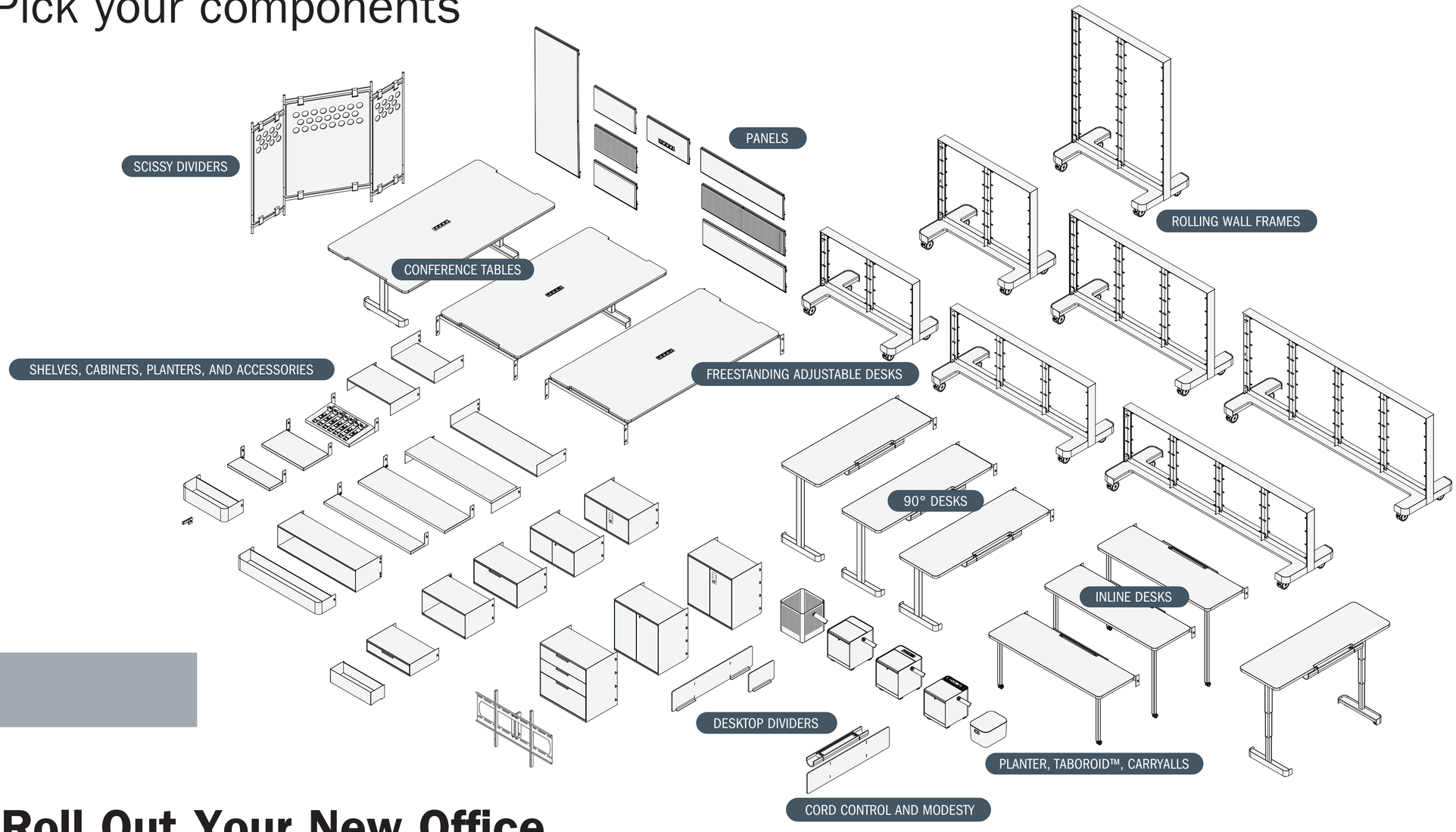

6 Steps to Roll Out Your New Office

2

Choose your frame color

Stock Matte White

Stock Matte Black

Spec panel Materials

Perforated Steel in Matte White.

Kirei PET Felt in 33 colors; shown in ochre.

Infused Veneer in 100 patterns (can be customized); shown here in Blush Tone Oak & Cardinal.

Wood Veneer in White Oak, Maple, or Walnut; shown here in White Oak.

Matte Black Powder Coat

3D Iconic Panels in 25 patterns (can be customized); shown here in Helsinki.

Gira lets you remodel your workspace anytime without hiring contractors. Removable panels snap onto fixtures and come in a tasteful variety of materials and finishes that can be mixed and matched. A more sustainable way to keep your office environs looking fresh.

4

Choose desk finishes

HPL Laminates

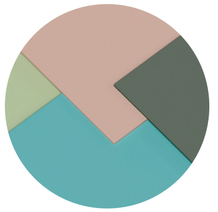

Forbo Furniture Linoleums

Sustainable Wood Veneers

Add accessories

Shelves and Cabinets

Desktop Dividers and Modesty Panels

Straddling Planters

Rolling Planters

Taboroids™

Scissy Divider Screens

Accessories, such as Shelves, Cabinets, Open Cubes and Clothing Hooks can be moved around all walls at 6 inch vertical increments. If ordered with lighting, the accessories also illuminate automatically when mounted in the System 1224 perimeter wall system.

Complete the space with System 1224

Remember oft-forgotten areas: the perimeter walls. System 1224 accepts all of Gira accessories, as well as a ton more workhorse pieces. Contact your sales representative or download the System 1224 catalog from bnind.com.

Gira
Design Inspiration

BN
pierre cardin
CAMPO BAEZA
FRENCH STYLE
THE FASHION BOOK
NEW YORK
ELIE SAAB
New New York Interiors
DOISNEAU
White Matte
Powder Coat
-161
Felt
Kieri
274
Orchid
White Oak
Rift Cut
Veneer

Powder Coat
Matte Black
-190
Felt
Kieri
908
Ivory
White Oak
Rift Cut
Veneer

Powder Coat
Matte Black
-190
White Oak
Rift Cut
Veneer

Powder Coat
Matte Black
-190
Felt
Kieri
908
Ivory
Felt
Kieri
444
Gray
White Oak
Rift Cut
Veneer

White Matte Powder Coat -161	White Oak Rift Cut Veneer
Powder Coat Pantone 15-3176 TCX	Powder Coat Pantone 13-0941 TCX
Powder Coat Pantone 16-0490 TCX	Powder Coat Pantone 13-5309 TCX
Felt Kieri 579 Olive Green	Felt Kieri 551 Teal
Felt Kieri 124 Ochre	Felt Kieri 274 Orchid

White Matte
Powder Coat
-161
Felt
Kieri
454
Mushroom
White Oak
Rift Cut
Veneer

White Matte
Powder Coat
-161
Felt
Kieri
108
Yellow
White Oak
Rift Cut
Veneer

Powder Coat Pantone 15-1247 TCX	White Oak Rift Cut Veneer
Powder Coat Pantone 15-3176 TCX	Powder Coat Pantone 13-0941 TCX
Powder Coat Pantone 16-0490 TCX	Powder Coat Pantone 13-5309 TCX
Felt Kieri 579 Olive Green	Felt Kieri 551 Teal
Felt Kieri 124 Ochre	Felt Kieri 274 Orchid
Felt Kieri 487 Blush	

White Matte
Powder Coat
-161
Desktop
White Matte
Laminate -209
Felt
Kieri
402
Taupe
White Oak
Rift Cut
Veneer

Powder Coat
Pantone
17-5309 TCX
Felt
Kieri
908
Iory
White Oak
Rift Cut
Veneer

White Matte
Powder Coat
-161
Desktop
White Matte
Laminate -209
Felt
Kieri
124
Ochre
Felt
Kieri
295
Dark
Orange
White Oak
Rift Cut
Veneer

White Matte
Powder Coat
-161
Desktop
White Matte
Laminate -209
Felt
Kieri
908
Ivory
White Oak
Rift Cut
Veneer

Powder Coat
Pantone
12-0304 TCX
Desktop
Forbo
4157
Pearl
Felt
Kieri
444
Gray
White Oak
Rift Cut
Veneer

Powder Coat
Pantone
14-1309 TCX
Desktop
Forbo
4157
Pearl
Felt
Kieri
124
Ochre
White Oak
Rift Cut
Veneer

Powder Coat
Pantone
17-4139 TCX
Desktop
Forbo
4183
Pistachio
Felt
Kieri
579
Olive Green
White Oak
Rift Cut
Veneer

Powder Coat
Matte Black
-190
Desktop
White Matte
Laminate -209
Felt
Kieri
908
Ivory
White Oak
Rift Cut
Veneer

Powder Coat
Pantone
13-0650 TCX
Desktop
Forbo
4183
Pistachio
Felt
Kieri
590
Sage
White Oak
Rift Cut
Veneer

Powder Coat
Pantone
13-0941 TCX
Desktop
White Matte
Laminate -209
Felt
Kieri
579
Olive Green
White Oak
Rift Cut
Veneer

Powder Coat
Pantone
15-6137 TCX
Felt
Kieri
454
Mushrooom
Felt
Kieri
579
Olive Green
White Oak
Rift Cut
Veneer

Powder Coat
White Matte
-161
Desktop
White Matte
Laminate -209
Felt
Kieri
487
Blush
White Oak
Rift Cut
Veneer

We create worlds of
possibility.
Powder Coat
White Matte
-161
Desktop
White Matte
Laminate -209
Felt
Kieri
124
Ochre
White Oak
Rift Cut
Veneer

Reconfigure on the fly, without tools.

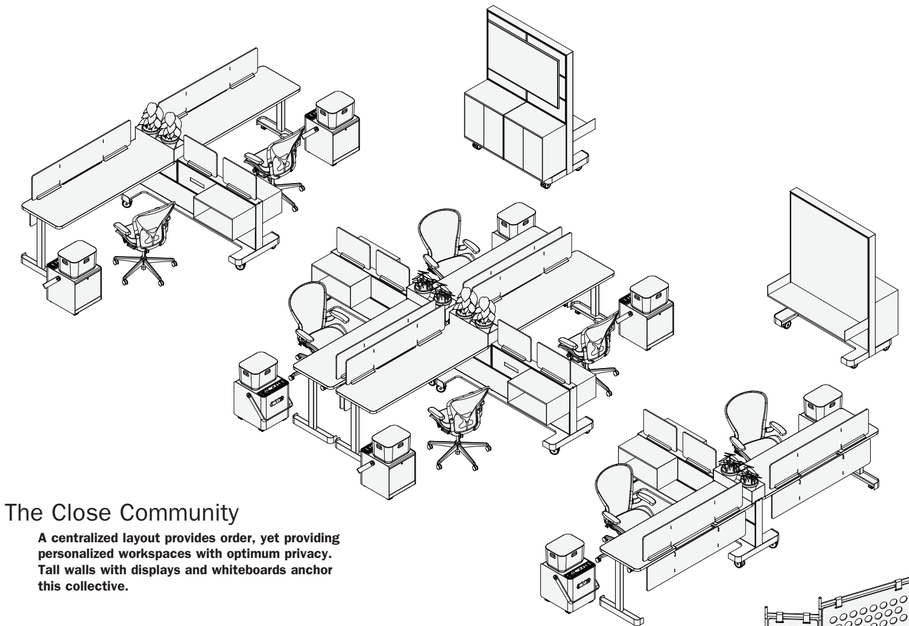

The Close Community

A centralized layout provides order, yet providing personalized workspaces with optimum privacy. Tall walls with displays and whiteboards anchor this collective.

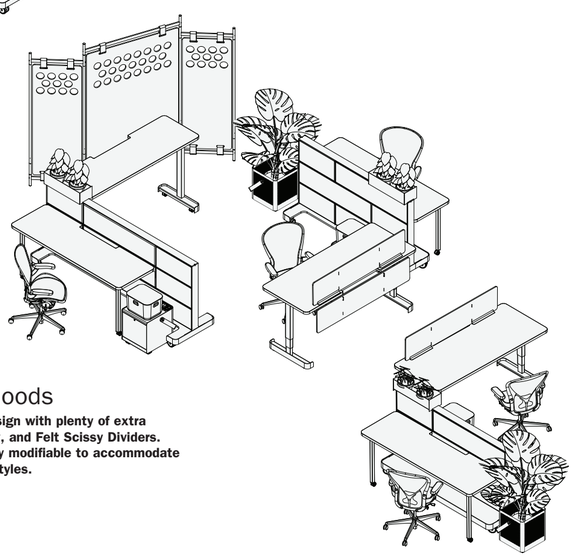

The Neighborhoods

A more organic design with plenty of extra worktops, greenery, and Felt Scissy Dividers. This layout is easily modifiable to accommodate personal working styles.

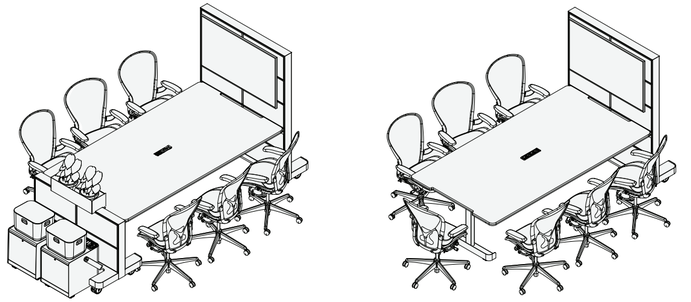

The Offshoots

Team meeting, using the conference tables with walls, can break off into smaller huddles with tall walls and displays or whiteboards. Scissy Dividers add visual and aural division.

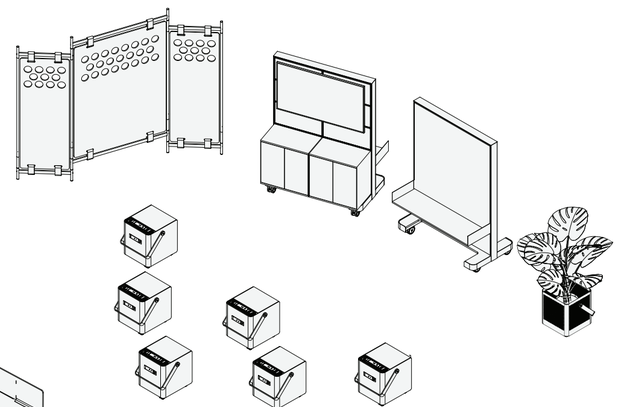

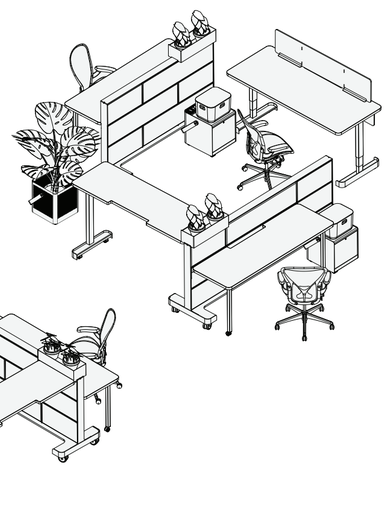

Reconfigure on the fly, without tools.

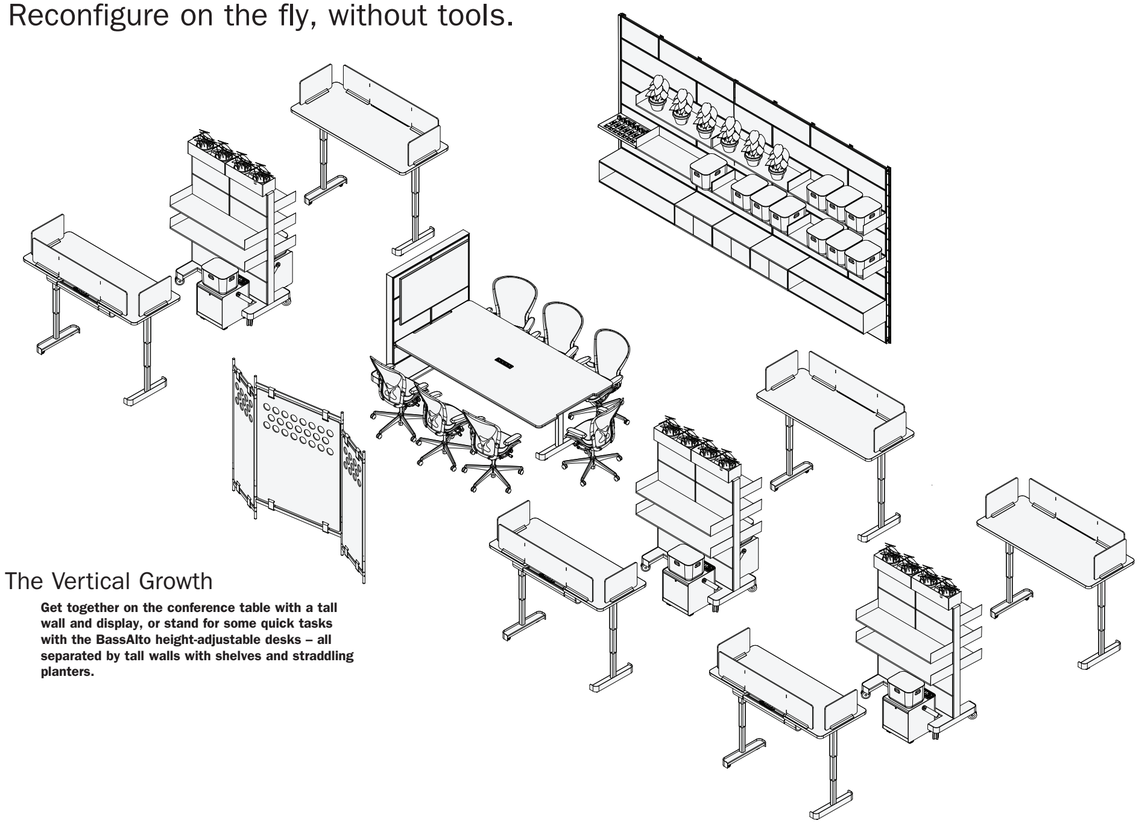

The Vertical Growth

Get together on the conference table with a tall wall and display, or stand for some quick tasks with the BassAlto height-adjustable desks – all separated by tall walls with shelves and straddling planters.

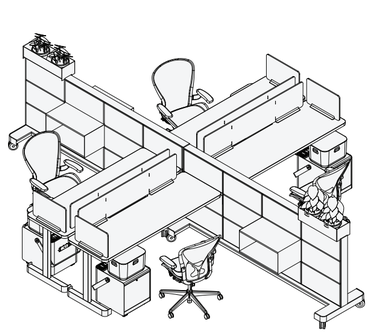

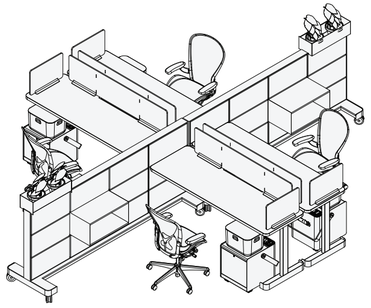

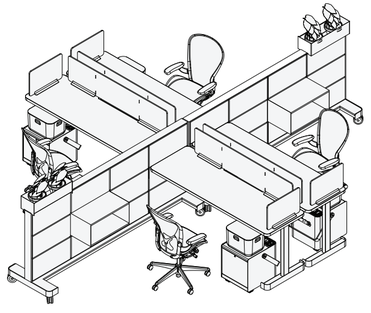

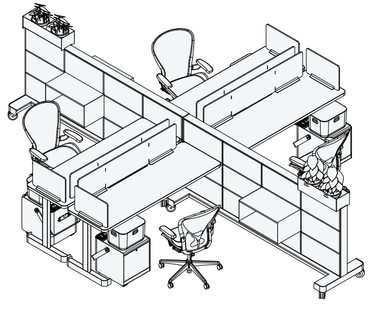

The Pinwheels

Smaller teams of four will find this configuration perfect for idea exchange, without lacking a bit of privacy with the addition of PET Felt Desktop Screens.

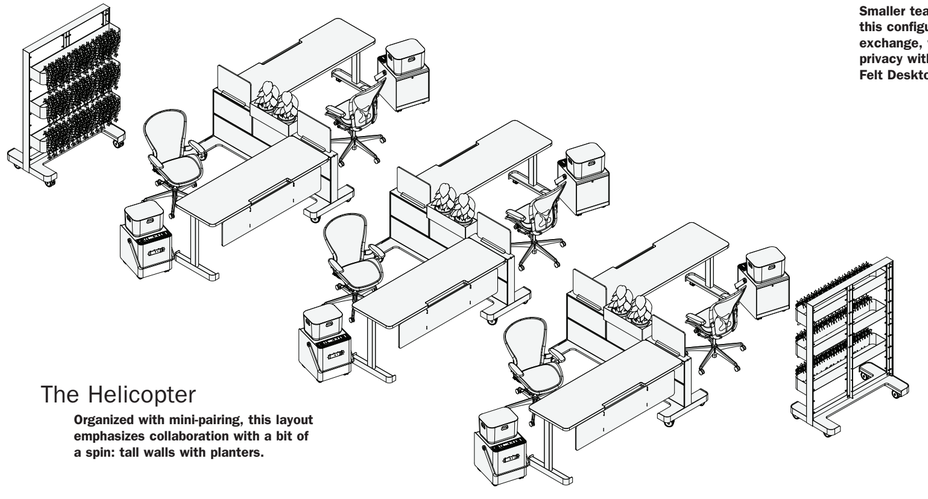

The Helicopter

Organized with mini-pairing, this layout emphasizes collaboration with a bit of a spin: tall walls with planters.

Gira

Technical Specifications

ROLLING WALL FRAMES

Rolling Wall Frame (Various)
Materials: Steel with MDF Base Insert
Dims: Various
R01000

Various heights and widths, complete the wall by adding wall panels on both sides (offered separately). Includes locking casters and MDF base insert in white oak veneer finish.

Style Options
-2W2T 2 panel wide x 2 panel tall / **Dims:** 29"**H** x 48"**W** x 30"**D**
-2W3T 2 panel wide x 3 panel tall / **Dims:** 41"**H** x 48"**W** x 30"**D**
-2W5T 2 panel wide x 5 panel tall / **Dims:** 65"**H** x 48"**W** x 30"**D**
-3W2T 3 panel wide x 2 panel tall / **Dims:** 29"**H** x 72"**W** x 30"**D**
-3W3T 3 panel wide x 3 panel tall / **Dims:** 41"**H** x 72"**W** x 30"**D**
-4W2T 4 panel wide x 2 panel tall / **Dims:** 29"**H** x 96"**W** x 30"**D**
-4W3T 4 panel wide x 3 panel tall / **Dims:** 41"**H** x 96"**W** x 30"**D**

Finish Options
-190 Matte Black Powder Coat Finish
-161 Matte White Powder Coat Finish

Insert Option
-3062 White Oak Veneer

Other finishes available; call for quote.

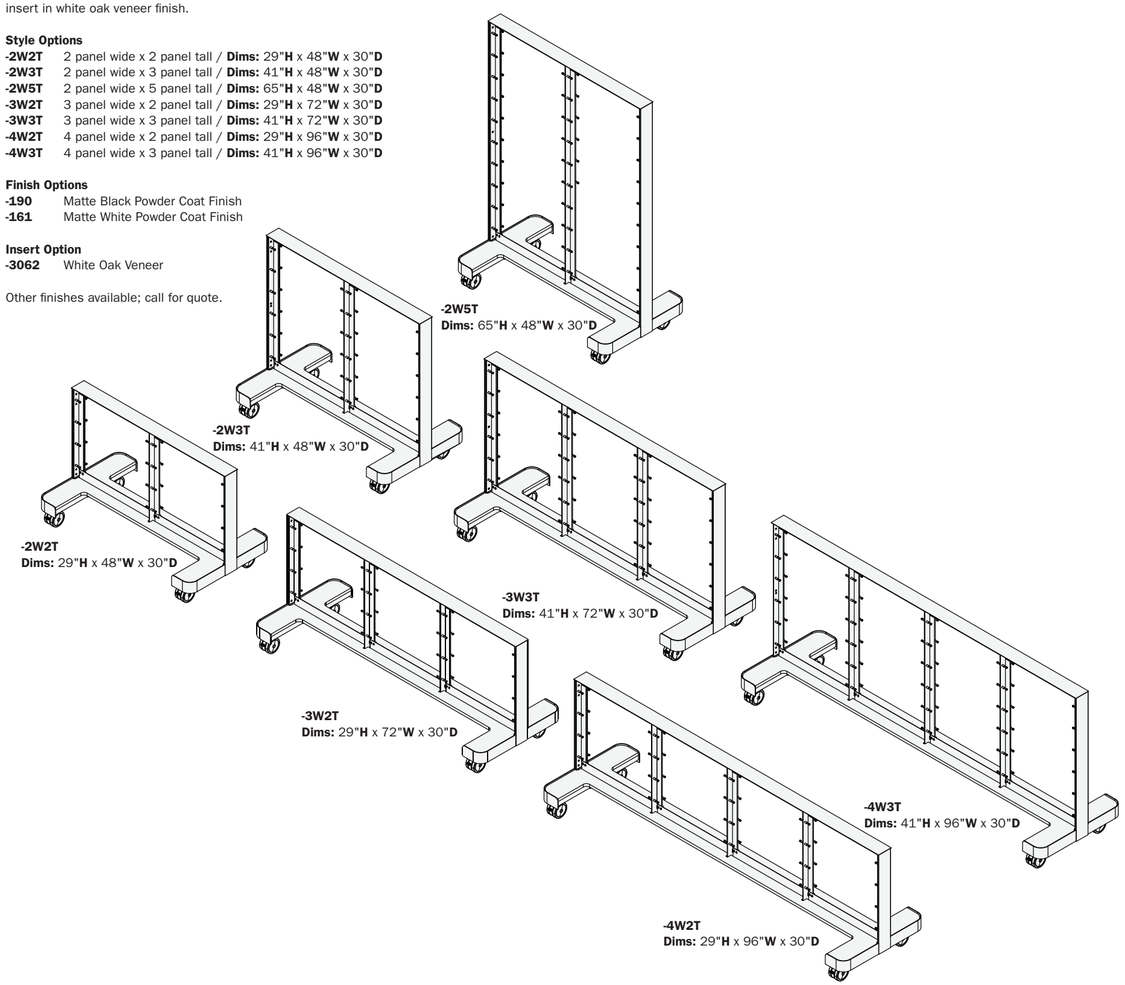

PANELS

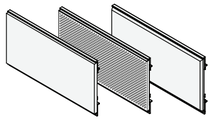

12" x 24" Panels
Materials: Steel, Steel with MDF, or Steel with MDF and Felt
Dims: 12"**H** x 24"**W** x 1"**D**

All Panels come with an installed Horizontal Crossbar on bottom to complete the "grid" look established by the Uprights. Metal panels can be used as is, or decorated with a magnetic graphic, sold separately.

240040
12" x 24" Metal Panels
Materials: Steel

R01500
12" x 24" Perforated Metal Panels
Materials: Steel

240025
12" x 24" Wood Panels
Materials: Steel and MDF

R01501
12" x 24" Felt Panels
Materials: Steel and Felt Fabric

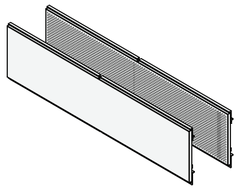

12" x 48" Panels
Materials: Steel
Dims: 12"**H** x 48"**W** x 1"**D**

All Panels come with an installed Horizontal Crossbar on bottom to complete the "grid" look established by the Uprights. Metal panels can be used as is, or decorated with a magnetic graphic, sold separately. 12" x 48" panels are only available in metal and perforated metal. Not available in felt or wood.

R01510
12" x 48" Metal Panels
Materials: Steel

R01511
12" x 24" Perforated Metal Panels
Materials: Steel

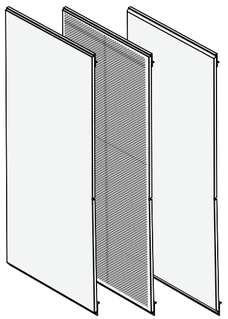

60" x 24" Panels
Materials: Steel, Steel with MDF, or Steel with MDF and Felt
Dims: 60"**H** x 24"**W** x 1"**D**

The 60" x 24" Panels come with an installed Horizontal Crossbar on bottom to complete the "grid" look established. These panels do have additional options of a grommet hole, when necessary.

R01513
60" x 24" Metal Panels
Materials: Steel

R01515
60" x 24" Perforated Metal Panels
Materials: Steel

R01512
60" x 24" Wood Panels
Materials: Steel and MDF

R01514
60" x 24" Felt Panels
Materials: Steel and Felt Fabric

ALL PANEL OPTIONS

Metal and Perforated Metal Panel Finish Options
190 Matte Black Powder Coat Finish
161 Matte White Powder Coat Finish

Wood Panel Finish Options
205 Black Matte Laminate
209 White Matte Laminate
301 Maple Veneer
3049 Walnut Veneer
3062 Rift White Oak Veneer

Felt Panel Finish Options
KIR Kirei Felt (add color number)

Grommet Hole Option For Electrical (i.e. for monitors)
GH Add Grommet Hole

Panel Location on Rolling Wall Options
T Top Location
M Middle Location
B Bottom Location

Crossbar Finish Options
C Clear Crossbar
B Black Crossbar

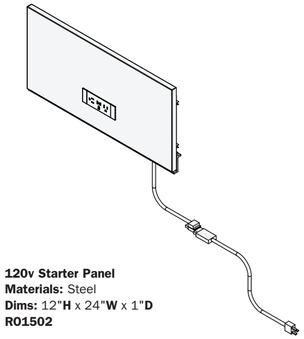

120v Starter Panel
Materials: Steel
Dims: 12"**H** x 24"**W** x 1"**D**
R01502

The starting point for integrating house 120v power into our system 1224. Panel kit contains a back side cord to run inside our fixture and connect to a common NEMA wall outlet, and a front facing NEMA triplex outlet.

Input
Input Voltage: 100-230 VAC 50-60Hz @ 15 Amps

Output
NEMA triplex receptacle - Max Amps 15 Amps - typically 20 sockets
Includes J-Coupler to allow for additional 120v walls to attach.

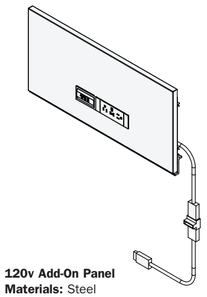

120v Add-On Panel
Materials: Steel
Dims: 12"**H** x 24"**W** x 1"**D**
R01503

Panel adds additional NEMA triplex outlets and USB-A/USB-C outlets to a 1224 wall already using the 120v starter panel.

Input
Input Voltage: 100-230 VAC 50-60Hz @15 Amps

Output
Output: NEMA triplex receptacle - Max Amps 15Amps - typically 20 sockets

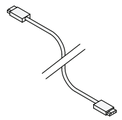

120v GST Daisy Chain Cord
Materials: Vinyl Coated Wire
OE2515672

Allows for the connection of one 120v wall to another. First wall requires 120v Starter Panel, and all additional walls require 120v Add-On panel.

Usage and lengths
Used to attach one 120v wall to another
Available 3', 6' and 9' long (standard lengths)

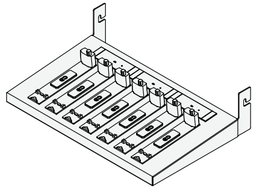

120v Charging Shelf
Materials: Steel and plastic
Dims: 3"**H** x 24"**W** x 14"**D**
R01704

Designed to attach to our 1224 walls and plug into house current, this shelf provides an optional location for charging up to seven additional Batteries not already charging in our walls or Taboroid units.

Input
Input Voltage: 100-230 VAC 50-60Hz @2.3 Amps

Output
Output: Can charge 7 Batteries simultaneously.

Charging Times
Charging Times (using PSU power panel): 5-7 hours

Charging Shelf Finish Options
190 Matte Black Powder Coat Finish
161 Matte White Powder Coat Finish

Note: plastic charging shows are in black when black shelf is ordered, and in white when white shelf is ordered.

ALL POWER PANEL OPTIONS

Panel Location on Rolling Wall Options
T Top Location
M Middle Location
B Bottom Location

Crossbar Finish Options
C Clear Crossbar
B Black Crossbar

Metal and Perforated Metal Panel Finish Options
190 Matte Black Powder Coat Finish
161 Matte White Powder Coat Finish

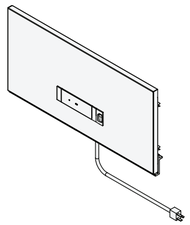

Power Supply Unit (PSU) Panel
Materials: Steel
Dims: 12"**H** x 24"**W** x 1"**D**
R01505

Start here for battery powered wall. The PSU panel contains a compact inline AC-DC power supply designed to supply charging power for the battery, or if desired, it can supply power to our USB accessory panel directly. With its 30V DC output and multiple rear-facing GST08 cable ports, the PSU is designed to efficiently charge up to three batteries simultaneously.

Input
Input Voltage: 100-230 VAC 50-60Hz @ 15Amps

Output
30v DC @2.3 Amps

Certifications
UL/IEC 62368-1
FCC Part 15 (B)
International certifications available upon request

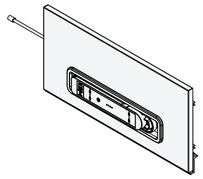

Removable Battery Panel
Materials: Steel
Dims: 12"**H** x 24"**W** x 1"**D**
R01504

Panel contains our portable 240Wh lithium–ion battery pack for use in workplace environments. Our removable and portable battery can be installed as a single unit or connected in series to suit any size team or capacity requirement. Offering 240wh of battery power through a paired USB-A / USB-C outlet, the battery will charge laptops and other devices all day long.

Battery Technical Specifications
Available in Black or White
Usable Capacity:200Wh
Weight: 1.6kg / 3.5 pounds
Built in protection for Short Circuit, Under Current, Over Current, and Over Temperature

Output
One front facing 12-watt USB-A and one front facing 30 watt USB-CC output.
Four rear facing GST08 Outputs, (to be used with our Add-on USB accessory panels).
Voltage range: 21.0V to 29.4V (with optional 24v power regulator module)
Amperage output: 6A per port, 12 A total per battery

Charging
Requires B+N Industries PSU charging panel and/or B+N Charging Shelf connected to common 120-120v house power to charge.
Input Voltage: 100-230 VAC 50-60Hz @ 15 Amp

Lifespan
Estimated Life Span 5+ years with a daily charge cycle
1,500 Estimated Charge Cycles (70% capacity remaining)
Charging Times (using PSU power panel): 5-7 hours
Contact us regarding battery buyback program.

Temperature Ranges
Operating Temperature: 10 - 35C
Storage Temperature: Up to 3 Months: -20°C to 40°C
Longer Duration: 10°C to 20°C (Ideal)
Battery should be stored at 40-60% charge (2 LEDs) in a low humidity environment (less than 70% RH)
Charged yearly to keep them at this level.

Safety Certifications
Transportation UN38.3 certified
IEC/UL 62368-1 (Safety)
IEC/UL 62133-2 (Li-ion Safety)
EN/IEC 61000-6-3 & 61000-6-1 (EMC)
FCC 15B (USA-EMC) UN38.3 (Shipping)

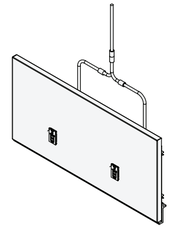

USB-A/C Add-on Panel
Materials: Steel
Dims: 12"**H** x 24"**W** x 1"**D**
R01506

This add-on accessory panel holds a pair of identical sockets, each with a single 12w USB-A (ideal for phones and tablets) and single 60w USB-C ports (ideal for laptops). Power for this panel is to be supplied from either our Removable Battery Panel, or directly from our PSU panel.

Input
Input Voltage: 100-230 VAC 50-60Hz @ 15 Amps

Output
60 watt USB-C
12 watt USB-A

Certifications
UL962A/CSA22.2
FCC Part 15(B)
International certifications available upon request

Power Setup A - Battery Powered Wall With Charging

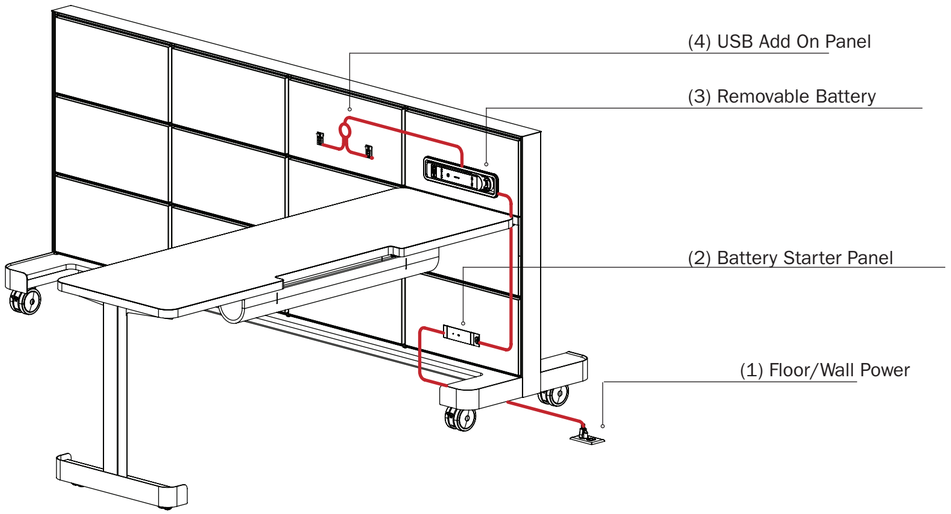

Shown here is a typical use of how our battery system can be used when house power is located nearby, but you want to be able to grab a battery and take it to a new location. This configuration takes advantage of house current to power a bank of USB-C sockets as well as keeping the battery fully charged for when you want to take it on the go.

Here is the suggested order of connection:

1. Starting at the floor, an easy to use NEMA cord is plugged into the floor or wall electrical socket. Walls are required to be no more than 24 inches away from a fixed power source.

2. This power feeds directly into the front side of our Power Supply Unit (PSU) panel. This panel and its PSU converts the 120v AC to 24v DC current for use by the battery and USB sockets.

3. Using an internal jumper cable, the low voltage 24v power is now brought up to the battery panel. 24v current charges a low battery, or keeps a charged battery topped off until it is needed. Batteries come equipped with a pair of USB sockets on their front face for use at all times, in the cradle or out on the road.

4. Lastly, this setup takes advantage of the fact that the battery cradle can also supply power to additional add on USB sockets, shown here in our USB add on panel.

Power Setup B - Battery Powered Wall Without Charging

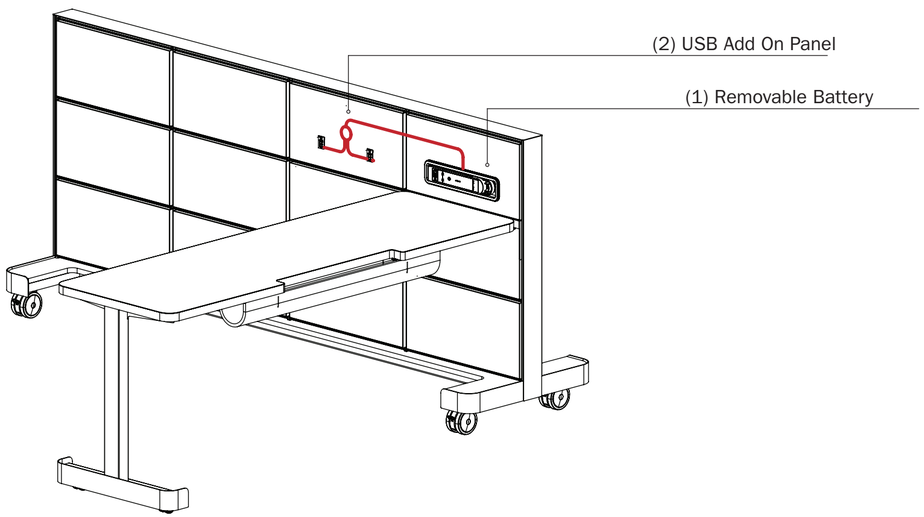

Shown here is a typical use of how our battery system can be used to supply power completely on its own without use of house power. Batteries will need to be charged on our remote mounted charging shelf, or by our rolling Taboroid.

Here is the suggested order of connection:

1. Starting by adding a Removable Battery Panel - Batteries come equipped with a pair of USB sockets on their front face for use at all times, in the cradle or out on the road. Batteries also have three rear facing ports to allow connection of USB Add-On sockets.

2. This power feeds from the battery directly into the USB Add-On panel. Multiple Add-On panels can be added to this chain as needed.

Power Setup C - 120v Powered Wall

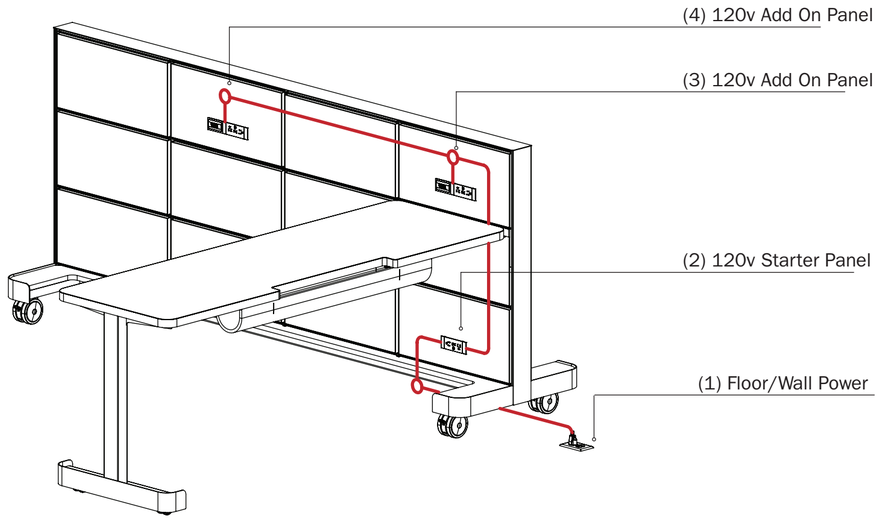

Shown here is a typical use of how our 120v system can be used when house power is located nearby and you want to run multiple 120v plugs off a single house socket.

Here is the suggested order of connection:

1. Starting at the floor, a NEMA cord is plugged into the floor or wall. Walls are required to be no more than 24 inches away from a fixed power source.

2. This power feeds directly into the base of the unit, up through the internal walls of the unit and fed into the 120v Starter Panel. This starter panel contains one triplex power strip.

3. Using an internal jumper cable, the 120v power is brought up to a 120v Add-On panel. This panel contains an identical 120v triplex plug, as well as a USB power bank. With 60 watts of charging power, this USB-C socket can charge most laptops directly.

4. Lastly, the module based nature of this system allows for additional Add-On panels to be distributed throughout the wall. Please note that no more than 12 total 120v outlets can be added to a single circuit.

Power Setup D - 120 v and Battery Powered Wall

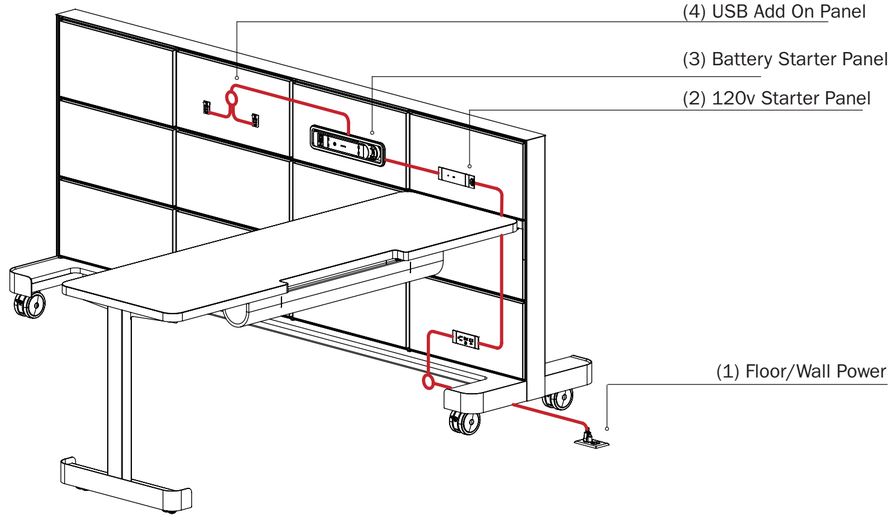

Shown here is an expanded use of how our Power system, showing how both 120v and 24v Battery Power can be integrated into one self contained Rolling Wall. This setup is for users that have access to 120v power, but would also like the flexibility of mobile power over the course of a day.

Here is the suggested order of connection:

1. Starting at the floor, a NEMA cord is plugged into the floor or wall. Walls are required to be no more than 24 inches away from a fixed power source.

2. This power feeds directly into the base of the unit, up through the internal walls of the unit and fed into the 120v Starter Panel. This panel contains one triplex power strip.

3. Using an internal jumper cable, the 120v power is brought up to a the Battery Power Supply Unit Panel (PSU). This panel converts the 120v AC to 24v DC for use in charging the battery and powering the USB-C sockets.

4. Lastly, we show the ability to run a pair of USB Add-On sockets on the same system to provide even more power options on this single wall.

Power Setup E – Daisy Chain Wall Sets

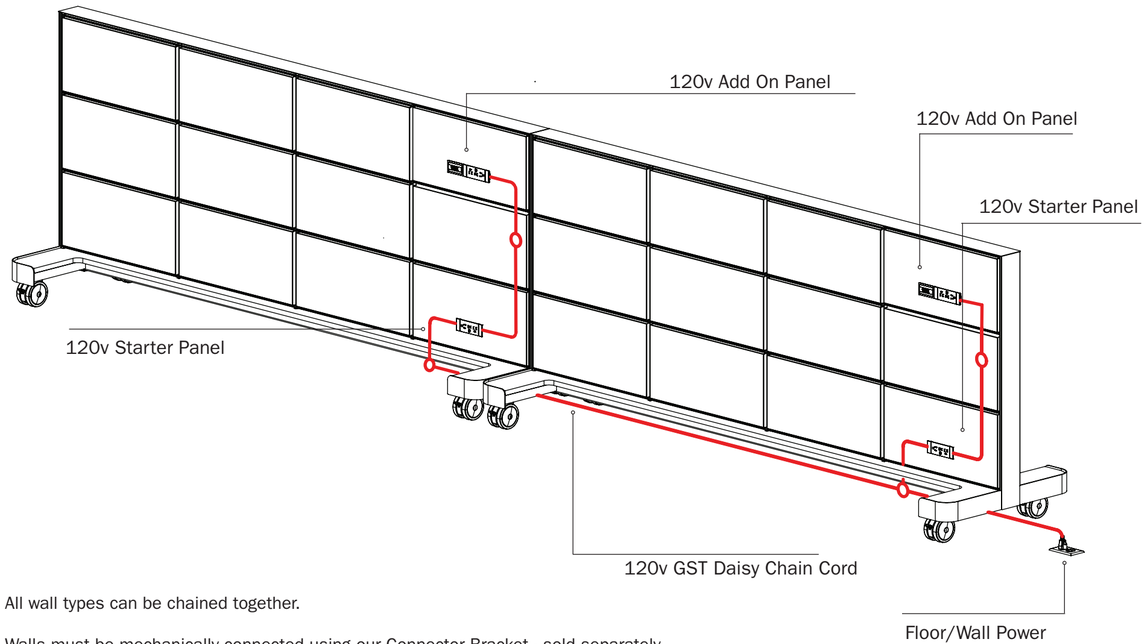

All wall types can be chained together.

Walls must be mechanically connected using our Connector Bracket - sold separately.

120v Starter Panels allow for an interconnecting cable to exit the bottom of one wall and enter the bottom of an adjacent touching wall.

Similarly, the battery walls may use one Battery Starter panel to supply power to the batteries or USB sockets on daisy chained adjacent walls through exit and entry of battery charging wire through the bottom of the adjacent frames.

For all wall types, maximum capacity of a continuous electrical circuit to be no more than 15 amps per run (approximately 12 outlets).

Portable Battery Pack Panel

Office power struggles solved.

Our portable battery pack for use in your workplace environments, with enough juice to charge most laptops 4 times or power an external monitor all day long. The 200Wh Lithium-Ion battery can be installed as a single unit or connected in a series of multiple ganged units to suit any size team or power capacity requirement. Offering all of its power through a pair of common USB-A and USB-C sockets ready to charge all your portables for the working day.

Your workplace is no longer constrained by traditional power supplies, and your agile workplaces are ready to change with the needs of the teams using them.

Battery Technical Specifications
- Available in Black or White
- Usable Capacity:200Wh
- Weight: 1.6kg / 3.5 pounds
- Built in protection for Short Circuit, Under Current, Over Current, and Over Temperature

Output:
- One front facing 12-watt USB-A, one front facing 30 watt USB-CC output.
- Four rear facing GST08 Outputs, (to be used with our Add-on USB accessory panels).
- Voltage range: 21.0V to 29.4V (with optional 24v power regulator module)
- Amperage output : 6A per port, 12 A total per Battery

Charging:
- Requires B+N Industries PSU charging panel and/or B+N Charging Shelf connected to common 120v house power to charge.
- Input Voltage: 100-230 VAC 50-60Hz, 15 AMPS

Lifespan:
- 1,500 Estimated Charge Cycles (With 70% capacity remaining, will depend on type of load and use)
- Estimated Life Span 5+ years
- Charging Times (using PSU power panel): 5-7 hours
- Contact us regarding battery buy-back program

Temperature Ranges:
- Operating Temperature: 10 - 35C
- Storage Temperature: Up to 3 Months: -20°C to 40°C
- Longer Duration: 10°C to 20°C (Ideal)
- Battery should be stored at 40-60% charge (2 LEDs) in a low humidity environment (less than 70% RH)
- Charged yearly to keep them at this level.

Safety Certifications:
- Transportation UN38.3 certified
- IEC/UL 62368-1 (Safety)
- IEC/UL 62133-2 (Li-ion Safety)
- EN/IEC 61000-6-3 and 61000-6-1 (EMC)
- FCC 15B (USA-EMC) UN38.3 (Shipping)

POWER PANEL AND BATTERY TECHNICAL DATA

Portable Battery Pack Panel

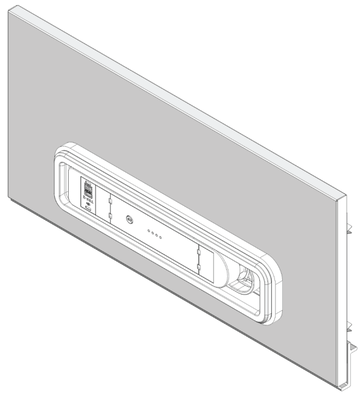

What it does:
- Attaches directly to any Gira or System 1224 wall.
- Provides 24v power through its USB-A and USB-C sockets located on the face of the battery.
- Battery is easily removed with the press of a button, and can be taken to other locations for portable power.
- When linked to a Battery Starter Panel, this panel can charge the battery,
- Provides 200 watt hours of 24v power.

What Includes:
- 12H x 24W backer panel
- Battery charging cradle
- Portable battery with USB-A and USB-C sockets
- Interconnecting cord - 6ft

What it does not include:
- Requires Battery Starter Panel to charge battery.
- Does not provide 120v power.

Battery Starter Panel

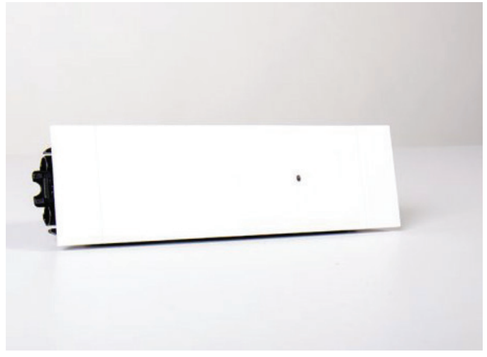

How we get all that power into the battery.

The Power Supply Unit (PSU) panel contains a compact in-line AC-DC power supply designed to convert 120v house current into 24v DC current to charge the battery or, if desired, it can also supply power to our USB accessory panel directly. With its 120v input and multiple 30v DC outputs, the PSU is designed to keep up to three portable batteries charged simultaneously.

PSU Technical Specifications
- Available in Black or White
- 70w AC-DC power supply
- 92% Efficiency
- Built in protection for Short Circuit, Under Current, Over Current, and Over Temperature

Output:
- 30v DC norm / 70v DC max at 2.3 amps
- 20A Female GST18i3 connector (AC)
- 6A female GST08 (DC)

AC Input:
- Input Voltage: 100-230 VAC 50-60Hz at 15 amps
- 20A Male GST18i3 connector

Construction:
- High Strength fire retardant polycarbonate
- Estimated Life Span 5+ years

Safety Certifications:
- UL/IEC 62368-1 : 2018 (safety)
- EN61204 : 2018 (EMC) EN 50121-3-2
- (Railway)
- FCC part 15 (B)
- Eco-design Directive 2009/125/EC

POWER PANEL AND BATTERY TECHNICAL DATA

Battery Starter Panel

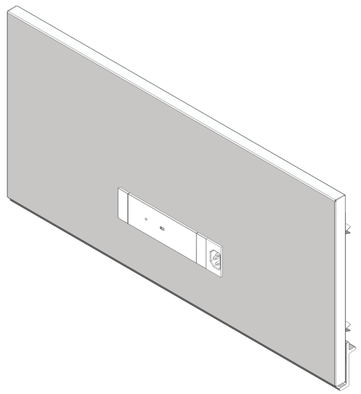

What it does:
- Attaches directly to any Gira or System 1224 wall.
- Converts 120v AC house power to 24v DC power to charge batteries or run USB ports directly.
- Has enough DC power to charge three portable batteries simultaneously.
- Has enough DC power to power up three of our USB add on panels directly, without the use of the battery.

What Includes:
- 12H x 24W backer panel
- Power Supply Unit that converts the AC power to DC power
- 3 rear facing GST08 sockets to distribute the 70 watts of DC power.
- A forward facing inlet socket for the 120v AC house power
- Three prong power supply cord - 108”

What it does not include:
- Panel has no forward facing powered sockets or outlets.

USB Accessory Panel

Because you can never have enough USB ports.

Our Add-On USB accessory panel holds a pair of identical sockets, each with a built in 12w USB-A (ideal for phones and tablets) as well as a 60w USB-C ports (ideal for laptops). Power for this panel is to be supplied from either our Battery Panel, or directly from our PSU panel.

With its big 60w charging capacity this little USB ushers in the era of universal laptop charging.

USB Add On Technical Specifications
- Available in Black or White
- Rated Total Output 72w Max
- Intelligent Device Recognition (IDR) compatible.
- Built in protection for Short Circuit, Under Current, Over Current, and Over Temperature

Output:
- TYPE C: MAX 60W
- 20V/3A, 15V/3A, 9V/3A, 5V/3A (PD3.0)
- 3.3 - 11.0V / 3.2A (PD PPS Mode)
- QC 2/3.0 5V/3A, 9V/2A, 12V/1.5A
- TYPE A: MAX 12W 5V / 2.4A IDR BC1.2,
- Apple 12W Mode
- Samsung Fast Charge

Input:
- Input Voltage: 24-30v DC
- Male GSST08 DC

Construction:
- High Strength fire retardant poly carbonate
- Estimated Life Span 5+ years

Safety Certifications:
- cTUVus listed – UL962A/CSA22.2;
- FCC Part 15(B);
- International certifications available upon request

USB Accessory Panel

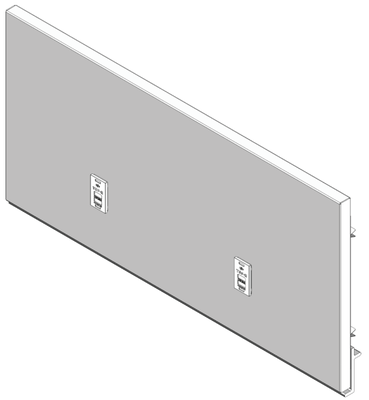

What it does:
- Attaches directly to any Gira or System 1224 wall.
- Provides power through a pair of USB-A and USB-C outlets
- USB-A is 12 watts - enough for phones and tablets
- SUB-C is 60 watts - enough for Laptops
- Can be internally linked directly to a Battery Starter Panel, or a Portable Battery Panel.
- Can be linked to additional USB Accessory Panel

What Includes:
- 12H x 24W backer panel
- A pair of USB outlets, each with a single USB-A and single USB-C
- Interconnecting cable - 78”
- Splitter cable to connect additional USB Accessory Panels

What it does not include:
- Requires Battery Starter Panel or Portable Battery Panel to supply DC current.
- Does not supply 120v power.

Charging Shelf

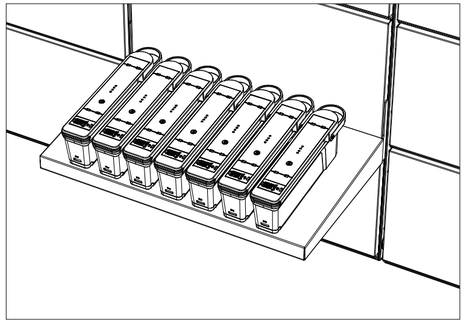

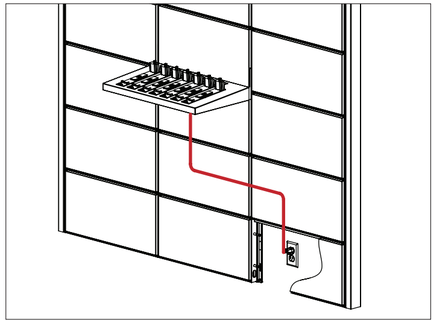

When the whole office needs a recharge

Designed to attach to our 1224 walls and plug into 120v house current, this shelf provides an optional location for charging up to seven additional batteries not already charging in our walls or Taboroid units. Power supply cord is designed to run behind the 1224 panels or simply exit at the bottom of the shelf and drape to the nearest 120v socket.

Charging Shelf Technical Specifications
- Available in Black or White
- 24w x 14d x 4t

Construction:
- Folded steel with high strength, fire retardant polycarbonate charging shoes

AC Power Connections:
- Input GST18 Starter Cord

Certifications:
- QF30 Power-supply
- UL/IEC 62368-1 : 2014 (safety)
- EN61204 : 2018 (EMC)
- EN 50121-3-2 (railway)
- FCC part 15 (B)
- Eco-design Directive 2009/125/EC:

Charging times:
- 1-2 Batteries = 5-8 hours
- 3-7 Batteries = 9-11 hours
-

Includes:
- NEMA Starter Cable - 108"

Charging Shelf

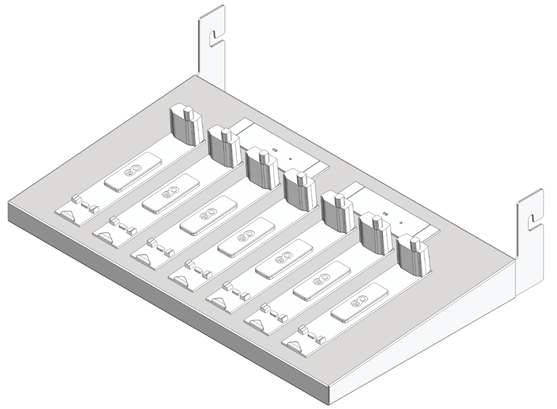

What it does:
- Attaches directly to any Gira or System 1224 wall.
- Plugs directly into a 120v electrical socket and charges up to seven batteries simultaneously.
- Can plug into 120v house electrical, or either of our 120v Starter or Add-On Panels.

What Includes:
- Seven charging shoes for Portable Battery.
- Power supply units to convert 120v house current into DC charging current.
- Three Prong power supply cord - 108”.

What it does not include:
- Batteries not included.

120v Starter Panel

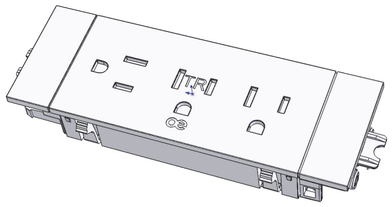

First step to 120v power.

The starting point for integrating house 120v power into our system 1224. Panel kit contains a back side cord to run inside our fixture and connect to a common NEMA wall outlet, and a front facing NEMA triplex outlet.

120v Starter Panel Technical Specifications
- Available in Black or White
- Available on Laminate, Steel or Felt panel bodies.

Input Voltage:
- 100-230 VAC 50-60Hz, 15Amps

Output:
- NEMA triplex receptacle - 15 Amps - typically 20 sockets

Includes:
- NEMA Starter Cable - 108"
- J-Coupler Splitter Cable to allow for additional 120v walls to attach.

120v Starter Panel

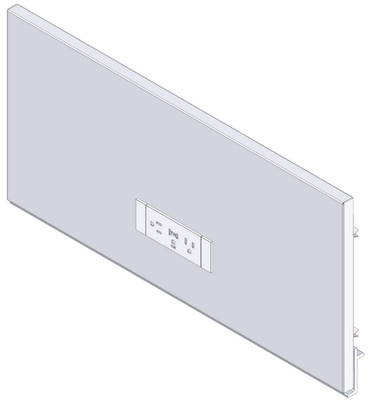

What it does:
- Attaches directly to any Gira or System 1224 wall.
- Plugs directly into a 120v electrical socket.
- Has three front facing NEMA three prong sockets to provide 120v power with a max of 15 amps
- Has one rear facing GST socket to allow for attachment to our 120 Add-On panels.
- Maximum of 20 sockets or 15 amps per chain of outlets.

What Includes:
- 12H x 24W backer panel
- One triplex NEMA receptacle to provide 120v power. 15 amps max
- Three Prong power supply cord - 108”

What it does not include:
- No DC power for USB or Battery Charging use, see Battery Starter Panel for info.

120v Add-On Panel

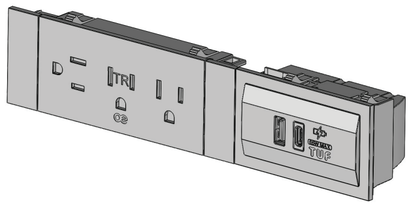

Adding more power.

Panel adds additional NEMA triplex outlets and USB-A/USB-C outlets to a 1224 wall already using the 120v starter panel.

120v Add-On Panel Technical Specifications
- Available in Black or White
- Available on Laminate, Steel or Felt panel bodies.

Input Voltage:
- 100-230 VAC 50-60Hz, 15Amps

Output:
- NEMA triplex receptacle - 15 Amps - typically 20 sockets
- High Power USB-C (60watts) and USB-A (15 watts) sockets.

Includes:
- Two internal GST jumper cords - 3 ft
- One three way GST splitter

120v Add-On Panel

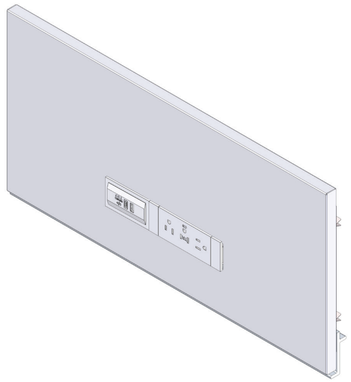

What it does:
- Attaches directly to any Gira or System 1224 wall.
- Powered only by our 120v Starter panel.
- Has three front facing NEMA three prong sockets to provide 120v power with a max of 15 amps
- Has a single 12 watt USB-A and a single 30 watt USB-C socket
- Includes a splitter to allow for attachment to additional120 Add-On panels.
- Maximum of 20 sockets or 15 amps per chain of outlets.

What Includes:
- 12H x 24W backer panel
- One triplex NEMA receptacle to provide 120v power.15 amps max
- Interconnecting GST cable - 36” (two units)
- 3 way splitter to allow for chaining of additional panels.

What it does not include:
- Requires 120v Starter panel for power, does not include cord to plug directly into house 120v power.

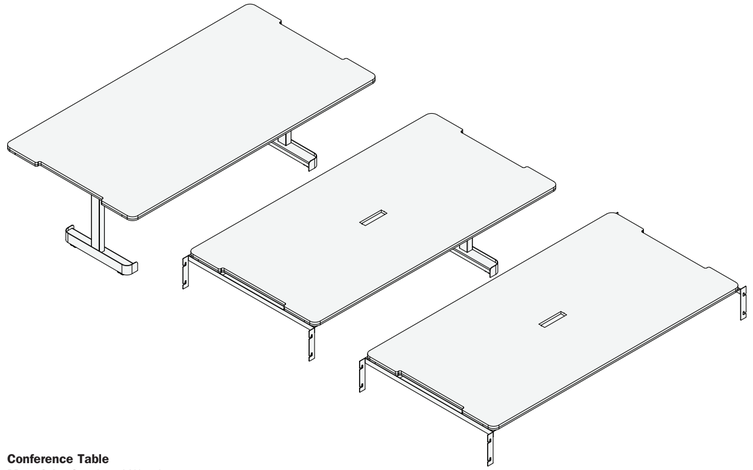

Conference Table
Materials: Steel and Wood
Dims: 36"**H** x 72"**W** x 48"**D OD**
R01100

Conference Table is available in 3 versions: a freestanding version that can be used anywhere, a single wall mounted version that is to be used with the Rolling Wall, or a double wall mounted version that spans between two rolling walls.

Conference Table Style Options
FRS Freestanding Conference Table
SWM Single Wall Mounted Conference Table
DWM Double Wall Mounted Conference Table

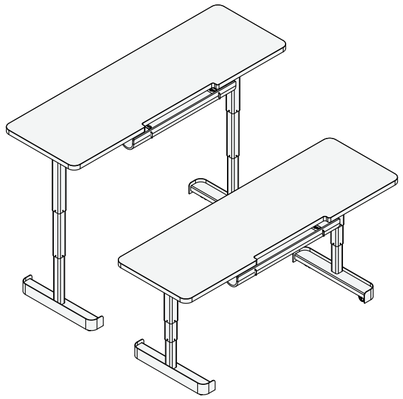

Motorized Adjustable Height Freestanding Desk
120v or Battery-Powered
Materials: Steel with Wood
Dims: 24" to 44"**H** ADJ x 72"**W** x 24"**D** or 30"**D**
R01200

Freestanding desk available in two depths, 24" and 30"D. This style desk has the ability to adjust from 24" to 44"H with the press of a button. Includes Cord Management Cradle.

Desk Depth Option
MFD24 24" Deep Desk Top
MFD30 30" Deep Desk Top

Power Option
120PW 120 Power White
120PB 120 Power Black
BPB Battery Powered Black
BPW Battery Powered White

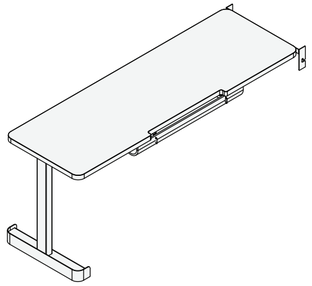

Perpendicular Desk
Materials: Steel with Wood
Dims: 30"**H** x 72"**W** x 24"**D** or 30"**D**
R01300

Perpendicular desk available in two depths, 24" and 30"D Works with Rolling wall to create a perpendicular style desk. Includes Cord Management Cradle. 30"H.

Desk Depth Options
PD24 24" Deep Desk Top
PD30 30" Deep Desk Top

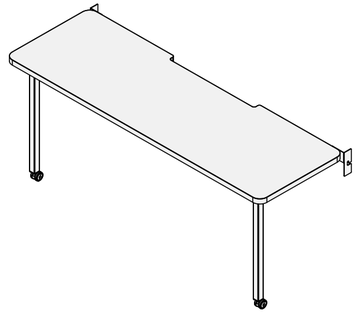

Inline Desk
Materials: Steel with Wood
Dims: 30"**H** x 72"**W** x 24"**D** or 30"**D**
R01400

Inline desk available in two depths, 24" and 30"D. Works with Rolling wall to create an inline style desk. Includes Cord Management Cradle. 30"H.

Desk Depth Option
IN24 24" Deep Desk Top
IN30 30" Deep Desk Top

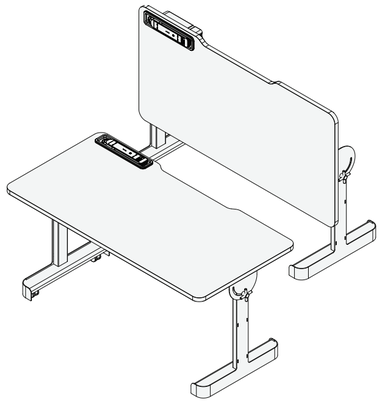

TilTable
Materials: Steel with Wood
Dims when in use: 30"**H** x 60"**W** x 30"**D**
Dims when flipped up: 41.3"**H** x 60"**W** x 24"**D**
1180460

TilTable's top flips up and locks in place for storage. Works with Rolling wall to create an inline style desk. Volta Battery Packs and Cord Management Cradle are available as add-ons. 30"H.

ALL DESK AND TABLE OPTIONS

Leg Finish Options
190 Matte Black Powder Coat Finish
161 Matte White Powder Coat Finish

Conference Table Finish Options
205 Black Matte Laminate
209 White Matte Laminate
301 Maple Veneer
3049 Walnut Veneer
3062 Rift White Oak Veneer
FRBO- Forbo Desktop Linoleum

Edgeband Finish Options for Desks

EB205 Black Matte Laminate
EB209 White Matte Laminate
EB3062 Rift White Oak Veneer

***Other finishes available; call for quote.**

SHELVES

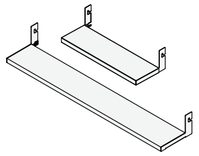

24" x 6" Metal Flat Shelf
Materials: Steel
Dims: 1-1/4"**H** x 24"**W** x 6"**D**
241105

48" x 6" Metal Flat Shelf
Materials: Steel and MDF
Dims: 1-1/4"**H** x 48"**W** x 6"**D**
241106

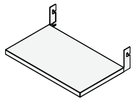

24" Metal Flat Shelf
Materials: Steel
Dims: 1-1/4"**H** x 24"**W** x 14"**D**
240930

24" Wood Flat Shelf
Materials: Steel and MDF
Dims: 1-1/8"**H** x 24"**W** x 14"**D**
240993

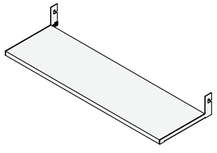

48" Metal Flat Shelf
Materials: Steel
Dims: 1-1/4"**H** x 48"**W** x 14"**D**
240931

48" Wood Flat Shelf
Materials: Steel and MDF
Dims: 1-1/8"**H** x 48"**W** x 14"**D**
240999

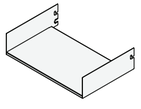

24" Metal Up Shelf
Materials: Steel
Dims: 5-5/8"**H** x 24"**W** x 14"**D**
240932

24" Wood Up Shelf
Materials: Steel and MDF
Dims: 5-7/8"**H** x 24"**W** x 14"**D**
240992

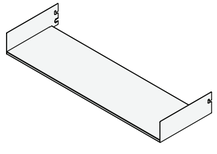

48" Metal Up Shelf
Materials: Steel
Dims: 5-5/8"**H** x 48"**W** x 14"**D**
240993

48" Wood Up Shelf
Materials: Steel and MDF
Dims: 5-7/8"**H** x 48"**W** x 14"**D**
241013

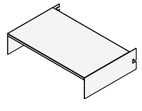

24" Metal Down Shelf
Materials: Steel
Dims: 5-5/8"**H** x 24"**W** x 14"**D**
240934

24" Wood Down Shelf
Materials: Steel and MDF
Dims: 5-7/8"**H** x 24"**W** x 14"**D**
241014

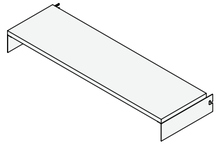

48" Metal Down Shelf
Materials: Steel
Dims: 5-5/8"**H** x 48"**W** x 14"**D**
240935

48" Wood Down Shelf
Materials: Steel and MDF
Dims: 5-7/8"**H** x 48"**W** x 14"**D**
241014

SHELF OPTIONS

Electrified Light Addition
E Electrified with lights

Wood Shelf Finish Options
205 Black Matte Laminate
209 White Matte Laminate
301 Maple Veneer
3049 Walnut Veneer
3062 Rift White Oak Veneer

Metal Shelf Finish Options
190 Matte Black Powder Coat Finish
161 Matte White Powder Coat Finish

CABINETS AND DRAWERS

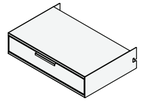

Metal Drawer with Locking Drawer Face
Materials: Steel
Dims: 5-5/8"**H** x 24"**W** x 14"**D**
240886*

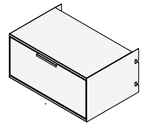

Metal File Drawer Cabinet with Metal Drawer Face
Materials: Steel
12"**H** x 24"**W** x 14"**D**
240907*

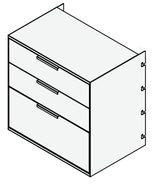

Metal File Cabinet With 3 Metal Drawers
Materials: Steel
Dims: 24"**H** x 24"**W** x 14"**D**
240912*

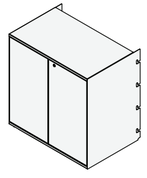

24" x 24" Metal Cabinet with Doors
Materials: Steel, Steel with MDF
Dims: 24"**H** x 24"**W** x 14"**D**
240884

24" x 24" Metal Cabinet is a fully versatile cabinet that can be electrified to add lights, add metal or wood push latch doors. A lock can also be added to for security.

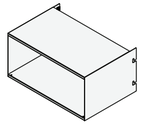

24" Open Metal Cabinet (various)
Materials: Steel
Dims: 12"**H** x 24"**W** x 14"**D**
240882

Open Metal Cabinet is a fully versatile cabinet that can be electrified to add lights, add metal doors or wood doors. A lock can also be added to for security.

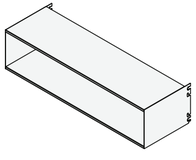

48" Open Metal Cabinet*
Materials: Steel
Dims: 12"**H** x 48"**W** x 14"**D**
R01516

Open Metal Cabinet is a fully versatile cabinet that can be electrified to add lights, add metal doors or wood doors. A lock, key or digital, can also be added to for security. Only available in all metal.

**Only offered in metal with no door or lock options.*

CABINET OPTIONS

Electrified Lighting Option
E Addition of Electrified Lights

Door Options
MD Metal Doors
LMD Metal Doors with Lock (Key)
DLMD Metal Doors with Digital Lock
WD Wood Doors
LWD Wood Doors with Lock (Key)
CLWD Wood Doors with Digital Lock

Wood Door Finish Options
205 Black Matte Laminate
209 White Matte Laminate
301 Maple Veneer
3049 Walnut Veneer
3062 Rift White Oak Veneer

Open Metal Cabinet/ Metal Door Finish Options
190 Matte Black Powder Coat Finish
161 Matte White Powder Coat Finish

All metal drawers and cabinets with doors below come electrified. An LED strip is tucked away under the unit to provide lighting underneath. Also available as non-electrified, upon request.

Other finishes available, not listed here.

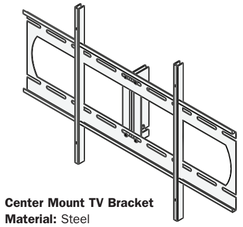

Center Mount TV Bracket
Material: Steel
Dims: 5-7/8"**H** x 24"**W** x 14"**D**
Finish: Black
241075-190

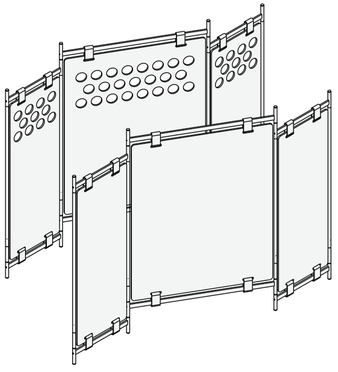

Scissy Divider
Materials: Steel with Felt
Dims: 78"**H** x 96"**W** x 1"**D**
R01705

Scissy Dividers are named for how they behave: scissoring along at any angle, and can be folded down for easy storage. Available with or without the hole pattern in the screens.

Divider Panel Options
WH With Holes
WH Without Holes

Divider Panel Finish Options
KIR- Kirei Felt (add color number)

Divider Frame Finish Options
190 Matte Black Powder Coat Finish
161 Matte White Powder Coat Finish

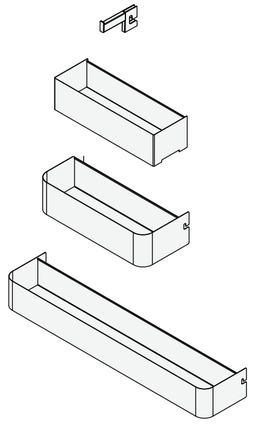

3" Faceout / Hook
Material: Brushed Chrome Steel
Dims: 1"**H** x 1/2"**W** x 3"**D**
240115

Topper Planter
Material: Steel
Dims: 6-1/2"**H** x 23-3/4"**W** x 7.798"**D**
1167689

24" Wall Planter
Materials: Steel & MDF
Dims: 6"**H** x 23.635"**W** x 8.095"**D**
R01701

48" Wall Planter
Material: Steel
Dims: 6"**H** x 47.635"**W** x 8.095"**D**
R01702

Finish Options for all Planters
190 Matte Black Powder Coat Finish
161 Matte White Powder Coat Finish

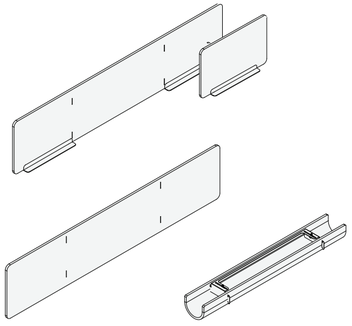

Desktop Divider - 60"
Materials: Steel with Felt
R01800

Modesty Panel - 60"
Materials: Felt
R01802

Desktop Divider - 20"
Materials: Steel with Felt
R01801

Cord Management Cradle
Materials: Felt
R01803

Desk Accessory Felt Finish Options
KIR- Kirei Felt (add color number)

Divider Stand Finish Options
190 Matte Black Powder Coat Finish
161 Matte White Powder Coat Finish

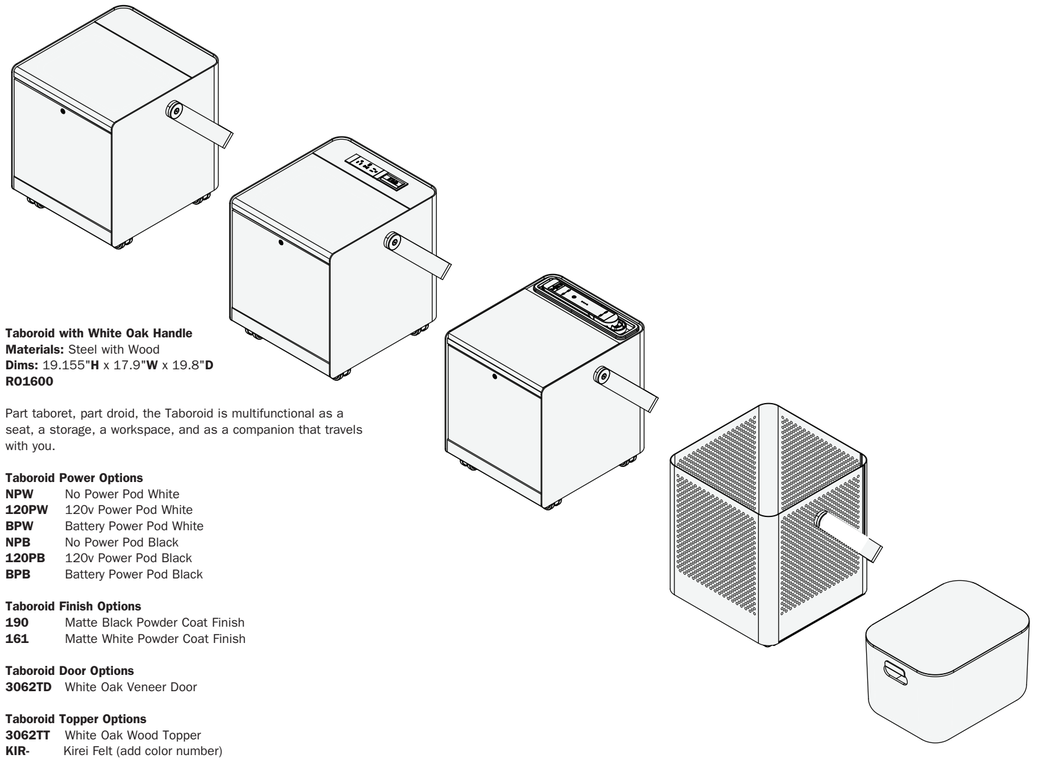

Taboroid with White Oak Handle
Materials: Steel with Wood
Dims: 19.155"**H** x 17.9"**W** x 19.8"**D**
R01600

Part taboret, part droid, the Taboroid is multifunctional as a seat, a storage, a workspace, and as a companion that travels with you.

Taboroid Power Options
NPW No Power Pod White
120PW 120v Power Pod White
BPW Battery Power Pod White
NPB No Power Pod Black
120PB 120v Power Pod Black
BPB Battery Power Pod Black

Taboroid Finish Options
190 Matte Black Powder Coat Finish
161 Matte White Powder Coat Finish

Taboroid Door Options
3062TD White Oak Veneer Door

Taboroid Topper Options
3062TT White Oak Wood Topper
KIR- Kirei Felt (add color number)

Taboroid Planter with White Oak Handle
Materials: Steel with Wood
Dims: 18.5"**H** x 18"**W** x 16.5"**D**
Available in 190 and 161
R01607

Felt Carryalls with Topper in White Oak
Materials: Steel with Wood
Dims: 9.375"**H** x 15"**W** x 11.7"**D**
Available in Grey and Pink Felt
R01608

MAGNETIC GRAPHICS AND WHITEBOARD SHEETS FOR METAL PANELS

Magnetic graphics and magnetic-backed whiteboard sheets adhere to all metal panels, and can be made in the following sizes, and customized to your artwork. Please contact you sales representative for artwork requirements.

240416 Custom magnetic graphic
240416-DE Dry erase magnetic

12" x 24" Panel

Trim Size:
11.438" x 23.438"

240416 Custom magnetic graphic
240416-DE Dry erase magnetic

24" x 24" Panel

Trim Size:
23.438" x 23.438"
240575 Custom magnetic graphic
240575-DE Dry erase magnetic

24" x 48" Panel

Trim Size:
23.438" x 47.438"
240576 Custom magnetic graphic
240576-DE Dry erase magnetic

24" x 60" Panel

Trim Size:
23.438" x 59.438"
240604 Custom magnetic graphic
240604-DE Dry erase magnetic

48" x 48" Panel

Trim Size: 47.438" x 47.438"
240577 Custom magnetic graphic
240577-DE Dry erase magnetic

12" x 48" Panel

Trim Size:
11.438" x 47.438

240605 Custom magnetic graphic
240605-DE Dry erase magnetic

Materials, Colors, and Finishes Guide

Metal and Powder coat

Clear Anodized Aluminum -038 | Black Anodized Aluminum -039 | White Matte Powder Coat -161 | Matte Black Powder Coat -190 | RAL Colors

Wood Veneers*

Maple Veneer -301 | White Oak Rift Cut Veneer | Hickory Veneer | Walnut Veneer -3049

***Wood Veneer Disclaimer:** Please keep in mind that veneers are, in fact, real wood. As such the veneered products you specify may feature the grain variation and natural characteristics allowed in the grade and species specified. Any veneer samples provided by B+N Industries are meant only to be representative of the species selected. Actual color, grain pattern and other appearance characteristics will vary within each veneer species and grade.

Laminates

White Matte Laminate -209 | Black Matte Laminate -205 | Maple Laminate -201 | White Oak Rift Cut Laminate | Walnut Laminate -389 | Customer Specified Laminate

Forbo Furniture Linoleum

Contact your sales rep for all color choices, or refer to **https://www.forbo.com/flooring/en-us/products/surface-solutions/furniture-linoleum/brogr3#panel_100** for all color, technical, and environmental information.

4157 Pearl | 4176 Mushroom | 4177 Vapour | 4132 Ash | 4155 Pewter | 4166 Charcoal | 4023 Nero | 4178 Iron | 4172 Mauve | 4175 Pebble

4154 Burgundy | 4174 Conifer | 4179 Smokey Blue | 4184 Olive | 4183 Pistachio | 4185 Powder | 4180 Aquavert | 4182 Spring Green | 4186 Orange Blast | 4181 Midnight Blue | 4164 Salsa

Kirei PET Felt

Contact your sales rep for all color choices, or refer to **https://www.kireiusa.com/products/echopanel-platoon-partition/** for all color, technical and environmental information.

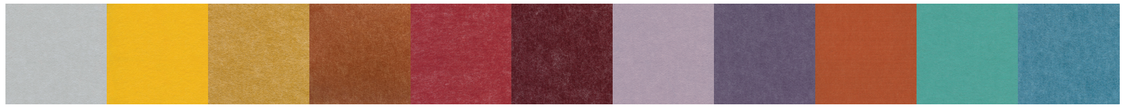

101 Frost | 108 Yellow | 124 Ochre | 167 Cinnamon | 193 Rouge | 269 Wine | 274 Orchid | 276 Lavender | 295 Dark Orange | 325 Viridian Green | 633 Pacific

330 Ivy | 338 Jade | 349 Vineyard | 365 Navy | 381 Lime Splice | 384 Seaweed | 402 Taupe | 442 Speckled Gray | 444 Gray | 447 Slate | 660 Coronet

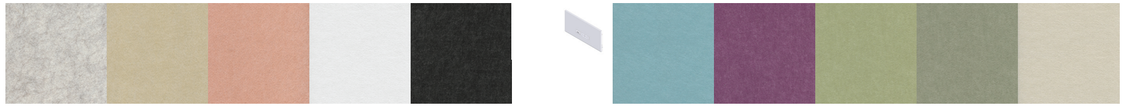

454 Mushroom | 468 Vanilla | 487 Blush | 500 White | 542 Charcoal | 550 Onyx | 551 Teal | 576 Magenta | 579 Olive Green | 580 Sage | 908 Ivory

B+N's Sustainability Guidelines

POWDER COATING
The powder coatings used by B+N incorporate raw materials that are free of Volatile Organic Compounds (VOCs) and Hazardous Air Pollutants (HAPs). In addition, the manufacturing process does not generate any airborne contaminants or hazardous waste.

STEEL AND ALUMINUM
The steel and aluminum used in B+N products contains both postconsumer and post-industrial recycled content. The raw material is sourced locally whenever possible and all our steel is 100% recyclable.

WOOD
All wood cores of our tables, desks, and cabinet fronts are made from FSC Certified no added formaldehyde (NAF) substrates. Cut-offs and sawdust form manufacturing are recycled into and used in secondary life-cycle products.

WOOD VENEER
Our wood veneer is sourced using only FSC Certified wood, which works to protect forests, as well as the people and species that live within them.

HIGH PRESSURE LAMINATE (HPL)
Composite wood panels made in North America have composite wood cores that have been found to be “better than carbon neutral,” sequestering more carbon than is expended in the panel’s manufacture from cradle to gate. Because of the high cellulose content, HPL may be safely incinerated for energy.

LINOLEUM
97 percent of the components of Forbo Furniture Linoleum are derived from natural materials, of which 62 percent is renewable. Additionally, every square meter of the linoleum produced relieves the environment of 40 grams of carbon dioxide.

FELT
The PET felt is manufactured with rapidly renewable and recycled content, low- or no-added-urea-formaldehyde adhesives, as well as eco-friendly dyes, and no added chemical binder. Additionally, the recycled PET felt diverts single-use plastic bottles from global landfills and waterways.

EDGE BANDING
We always use low-VOC adhesives, adhering to stringent California laws, and avoiding VOC emission into the atmosphere. Additionally, our manufacturer is local which allows us to reduce transit environmental impacts.

LIGHTING
All accessories that have integral lighting are constructed with industry-leading, low voltage LED, providing maximum effectiveness with minimal power needs.

PACKAGING
We use the most sustainable, environmentally friendly, pre- and/or postconsumer content, and compostable material available.

LOCAL SOURCING
We strive to use California manufacturing when possible, cutting down on transit environmental impacts. If California manufacturing is not available, we aim to source domestically.

CORPORATE RESPONSIBILITY
B+N partners with programs to repurpose surplus furniture and other items with the goal of keeping them out of the landfills and giving them new life in community organizations.

For more detailed sustainability information on any material, such as Forbo Furniture Linoleum or a specified laminate, contact your sales representative.

Terms And Conditions

QUOTE BY PHONE
1-800-350-4127 (Outside Northern California)
1-650-593-4127 (Northern California)

QUOTE/ORDERING BY E-MAIL
MAIL@BNIND.COM (Ready 24 hours a day)

CUSTOMER SERVICE
Customer service is available 8:00 am to 5:00 pm (PST) Mon. – Thurs. and 8:00 am to 12:00 pm on Fri. to answer your inquiries regarding products, quotes or orders.

WARRANTY
We fully support the quality of our product. If there are any manufacturing defects within a year of delivery, please contact our Customer Service Department by phone or e-mail for assistance.

PRODUCT WARRANTY LIMITATIONS
The Customer is purchasing the fixtures in an “as-is” condition, unless otherwise reported to the Company pursuant to [the inspection provision in the contract], as of the date of delivery and specifically and expressly without any warranties, representations or guarantees, either expressed or implied, except as set forth below, as to its condition, fitness for any particular purpose, merchantability, or any other warranty of any kind, nature or type whatsoever from or on behalf of the seller.
The Company hereby warrants to the Customer and its successors and assigns that the product supplied to the Customer is constructed only for the use and purposes contemplated by the Customer set forth in the contract; and the Company, immediately prior to the delivery of the product had good and lawful right to sell the product, and that there is hereby conveyed to the Customer on the date of delivery, good title to the product, free and clear of all liens, claims, encumbrances and rights of others.

WEBSITE / PRINTED MATERIALS
The copy has been reviewed to present information as accurately as possible. If an error is found in description or pricing, or the item has been discontinued, yet not updated, B+N reserves the right to correct it at the time it was discovered.
PRODUCT OFFERINGS AND MATERIAL FINISHES ARE SUBJECT TO CHANGE AT ANY TIME.

ORDER SHIPMENTS ESTIMATES
Orders in stock will ship via ground in 2 – 5 days, unless another service level is requested by the customer.

BACK ORDERS
Unless otherwise noted, back orders will ship when they are back in stock at our facility. Your Sales Administrator will keep you advised on the status of all back orders.

BLANKET ORDERS
Blanket orders are subject to a unique set of Terms & Conditions defined at the time of order placement.

MINIMUM ORDER REQUIREMENTS
$500 threshold must be reached to place an order.

STORAGE
Storage fees will be assessed after 30 days for all Materials that were scheduled to ship but were delayed for customer related reasons at no fault to B&N Industries. Fees will be assessed weekly at $500 or 5% of the total order, whichever is greater. If an order is paid in full, then the storage fees must be cleared prior to shipment. If an order is partially paid for, then the remaining balance on the order plus storage fees must be paid prior to shipment.

CANCELLATION AND RETURN ITEMS
1. Stock items must be returned within 30 days, in resellable condition. Return of stock items may incur a 25% re-stocking fee. Freight charges on returns are the customer’s responsibility. A return authorization is required for all returns. Items returned without the proper authorization will not be accepted. B+N assumes no liability for customer returns which arrive damaged due to shipment transportation.
2. Non-stock items purchased may not be returned.
3. Prepaid Materials that remains beyond the 30-day original delivery schedule prior to cancellation will also be subject to storage fees.

FREIGHT AND MULTIPLE SHIPMENTS
1. The following will result in additional charges unless otherwise stated on your quotation:
– Shipments to multiple destinations or split shipments to the same location.
– Customer requesting custom packaging (includes breakout into multiple packages) and shipped to one location.
2. Collect or 3rd Party Billing shipments are the responsibility of the freight payer.
3. Freight quotations are subject to re-quote at any time prior to the order being placed or at time of shipment if shipment is delayed.
4. Customer is responsible to arrange and pay for International freight, as quotes are for transportation only. Freight quotes provided by B&N do not include the broker, customs duties, fees or taxes. That is the responsibility of the customer to obtain and pay directly to the source. Broker information must be provided prior to shipping.
5. Weights and measurements may change due to changes in suppliers and/or packaging.
6. B&N is unable to guarantee delivery times or dates. Delivery times and dates are the responsibility of the shipping agent.
7. Regarding split shipments: On occasion, an order may ship from multiple locations based on availability.

PRODUCT DISCREPANCIES AND DAMAGES VIA SHIPMENT
1. Customer must inspect items upon delivery for damage or discrepancy. Please refer to B&N’s Delivery Shipper Checklist Info document for terms.

The Delivery Checklist can be found here:
https://www.bnind.com/resources/technical-data

2. B+N accepts no liability for damage incurred during shipping. Any damage found at time of delivery must be noted by customer on delivery receipt and signed/initialed by driver. Customer is to retain all packaging with damaged items for an on-site inspection by carrier.
3. For damage on 3rd party or collect shipments, the customer is responsible for filing the claim with the carrier for financial reimbursement.
4. If any product arrives in damaged condition, a freight claim must be filed with the delivering carrier. Retain packing Materials and note on the Bill of Lading “DAMAGED”. Our Customer Service Department will assist you with any questions regarding filing a freight claim.
5. All claims regarding shortages and freight damages must be presented WITHIN 7 DAYS of receiving the shipment.

PAYMENT METHODS AND TERMS
ACH, Wire, and Company Checks
· Banking information can be provided upon request for electronic payment options

Credit Cards (subject to 2.5% processing fee)
· We accept VISA, MASTERCARD, AMERICAN EXPRESS.

1. Payment is due in full prior to shipping of product for all PREPAID ACCOUNTS. We do not ship COD. For payments made by check or bank transfer, the order will be processed upon receipt and approval of check or receipt of funds.
2. Consideration for establishing terms requires a combined order amount of $1,000,000+.
3. Approved repeat customers may qualify for NET terms at B&N’s discretion if sufficient volume is reached. A credit application must be completed with the necessary references. Please allow 2-3 weeks for processing. All custom orders outside of a standard project scope will continue to require a 50% deposit.

SALES TAX
Due to the Wayfair vs South Dakota ruling all orders are subject to sales tax in the state that the Materials is delivered to unless a valid resale certificate is provided. Due to uncertain Economic Nexus requirements sales tax can be added to any order after a quote has been provided.
1. Taxable orders paid for by the customer and will-called at our Califomia facility are taxed at the current rate for San Mateo County.

PROTOTYPES, DRAWINGS, TOOLING, AND FIXTURES
1. Drawings provided by B+N are the exclusive property of B+N Industries, Inc.
2. Prototypes made from drawings that are not detailed and approved by B+N Industries, Inc., or have been supplied via verbal instruction from the customer, are subject to the interpretation of B+N Industries, Inc.
3. Tooling dies and fixtures made and used exclusively for a job or customer, remain the property of B+N Industries, Inc., unless otherwise established.

PHOTOGRAPHY OF COMPLETED PROJECTS
B+N Industries, Inc. reserves the right to photograph a completed project that has utilized our product offerings and retains the rights to use the photographs in advertising, on our website, public relations, and all marketing materials.

B+N Industries

Main Offices:

15 Guittard Road

Burlingame, California 94010

1.800.350.4127

www.BNind.com

New York Showroom and Offices:

(By Appointment Only)

420 West 14th Street

New York, New York 10014

212.255.4110

Houston Showroom and Offices:

(By Appointment Only)

1800 Bering Drive, Suite 500

Houston, Texas 77057

713.430.9100

© B&N Industries, Inc.

facebook.com/BNIndustries

instagram.com/bn_industries/

linkedin.com/company/b&n-industries

pinterest.com/bnindustries/

twitter.com/BN_Industries